A3 Colour Photocopiers

Sharp BP-51C45

A smart A3 colour MFP with multi-layered security features and advanced environmental credentials, perfect for any modern office.

- 45ppm A3 colour MFP with seamless integration and connection to cloud based business process applications
- Multi-layered security features include automatic BIOS recovery if anomalies are detected during start-up and standard Trusted Platform Module to keep your confidential data secure
- Collaborate with ease using the Microsoft® Teams connector to print from or scan to your Microsoft® Teams channels directly from the MFP control panel[1]
- Keep your data, device and network secure with optional Bitdefender anti-malware protection software[2]
- Bring more flexibility to your print output with an extensive range of finishing options including stapling, punching and folding
- A sustainable design uses up to 50% recycled plastics in manufacturing the base unit of the MFP and cardboard packaging helps reduces plastic waste
- 100-sheet Reversing Single Pass Feeder scans one or two-sided originals at speeds of up to 80ipm for completing large jobs with ease and efficiency
- Advanced eco-technologies deliver an impressively low TEC value and standby power consumption rate
- With support for Microsoft Entra ID you can manage identities and control device access via a secure cloud-based tool
- Intuitive icons and a smartphone style interface on the 10.1-inch colour LCD control panel make operating the MFP smooth and easy
- Single sign-on lets you securely print from or scan to public cloud storage services quickly and easily
- Keep up-to-date and compliant with automatic online firmware and application updates via the Sharp Application Portal

[1] Microsoft® Teams connector requires BP-AM10., [2] Bitdefender anti-malware protection software requires BP-VD10.

Configurations

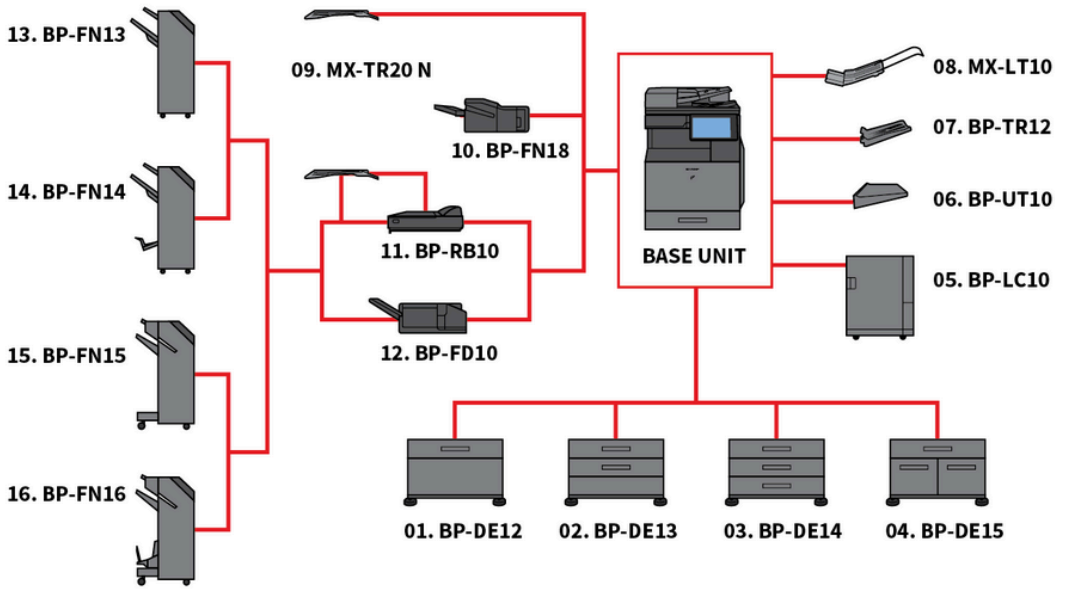

Dimensions

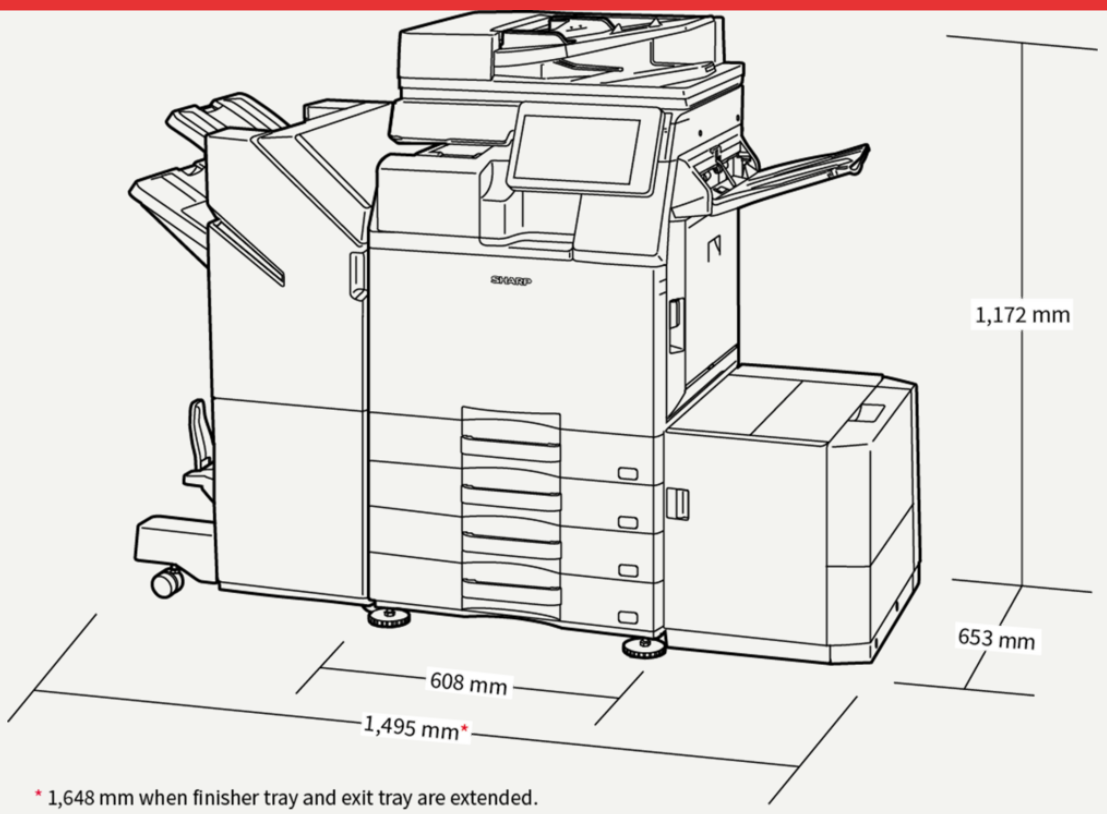

* 1,648 mm when finisher tray and exit tray are extended.

Options

Base Unit

BP-LC10 Large Capacity Tray
3,000 sheets (based on 80 g/m2), A4-B5 (60-220 g/m2)

BP-DE14 Stand with 3 x 550-sheet Paper Drawers
550 sheets each for lower and upper trays (based on 80 g/m2), SRA3-A5R (60-300 g/m2)

BP-UT10 Utility Table

BP-DE13 Stand with 2 x 550-sheet Paper Drawers
550 sheets each for lower and upper trays (based on 80 g/m2), SRA3-A5R (60-300 g/m2)

BP-DE15 Stand with 550 + 2100-sheet Paper Drawers
Upper tray: SRA3-A5R, 550 sheets* (60-300 g/m2); Lower tray (Left): A4, 1,200 sheets* (60-105 g/m2); Lower tray (Right): A4 - B5, 900 sheets* (60-105 g/m2); * Number of sheets based on 80 g/m2

BP-DE12 Stand with 550-sheet Paper Drawer
550 sheets (based on 80 g/m2), SRA3-A5R (60-300 g/m2)

Scanning

MX-EB20 OCR Expansion Kit
Convert scanned documents into editable Microsoft® Office files and searchable PDFs via Optical Character Recognition (OCR).
Essential MFPs only

MX-EB19 Enhanced Compression Kit
Enables creation of high compression PDFs.

Storage

BP-SD10 High Capacity SSD
512GB SSD

Security

BP-FR12U Data Security Kit
Commercial version

BP-VD10 Virus Detection Kit

Printing

MX-PF10 Barcode Font Kit
Enables barcode printing

MX-PU10 Direct Print Expansion Kit
Direct print Microsoft® Office files from USB drives. Essential MFPs only.

Sharp OSA

MX-AMX1 Application Integration Module

BP-AM11 External Account Module

BP-AM10 Application Communication Module

Faxing

MX-FWX1 Internet Fax Expansion Kit

Finishing

MX-LT10 Long Paper Feeding Tray
Recommended for banner printing

MX-PN15D Punch Module - 4 Hole Wide
Punch module for BP-FN13/BP-FN14/MX-FN28/MX-FN29

MX-PN14D Punch Module - 4 Hole Wide
Punch module for BP-FN11/BP-FN12

BP-FN14 1k Saddle Stitch Finisher
A3W-A5R (offset/staple), SRA3-A5R (non offset); Offset tray (upper): max. 1,000-sheet paper capacity (based on 80 g/m2); Stapling capacity: max. 50-sheet multi-position staple (based on 80 g/m2); Saddle stitch tray (lower): 7 sets (11-15 sheets), 10 sets (6-10 sheets), 20 sets (1-5 sheets). 15 sheets max per set; Requires BP-RB10 Paper Pass Unit

MX-PN16D Punch Module - 4 Hole Wide
Punch module for BP-FN15/BP-FN16/BP-FN19/MX-FN30/MX-FN31/MX-FN34/MX-FN35

MX-PN15C Punch Module - 2/4 Hole
Punch module for BP-FN13/BP-FN14/MX-FN28/MX-FN29

MX-PN14C Punch Module - 2/4 Hole
Punch module for BP-FN11/BP-FN12

BP-FN13 1k Finisher
A3W-A5R (offset/staple), SRA3-A5R (non offset); Offset tray (upper): max. 1,000-sheet paper capacity (based on 80 g/m2); Stapling capacity: max. 50-sheet multi-position staple (based on 80 g/m2); Requires BP-RB10 Paper Pass Unit

BP-FD10 Folding Unit
200 sheets (based on 80 g/m2), A3, B4, A4R (Z-fold, half fold), A3, A4R (C-Fold, Accordion fold), 60-256 g/m2

MX-PN16C Punch Module - 2/4 Hole
Punch module for BP-FN15/BP-FN16/BP-FN19/MX-FN30/MX-FN31/MX-FN34/MX-FN35

BP-TR12 Exit Tray Unit

BP-RB10 Paper Pass Unit
Required when using BP-FN13, BP-FN14, BP-FN15 or BP-FN16

BP-FN16 3k Saddle Stitch Finisher
A3-B5 (offset/staple), SRA3-A5R (non offset); Offset tray (upper): max. 3,000-sheet paper capacity (based on 80 g/m2); Stapling capacity: max. 65-sheet multi-position staple (based on 80 g/m2); Manual Stapling: 1-point at rear (Flat), 45 sheets (64 g/m2), 40 sheets (80 g/m2); Stapleless capacity: max. 10-sheet (64 g/m2), 8 sheet (65 - 81.4 g/m2), 6 sheet (81.5 - 105 g/m2); Saddle stitch tray (lower): 10 sets (11-20 sheets), 15 sets (6-10 sheets), 25 sets (1-5 sheets). 20 sheets max per set; Requires BP-RB10 Paper Pass Unit

BP-FN15 3k Finisher
A3-B5 (offset/staple), SRA3-A5R (non offset); Offset tray (upper): max. 3,000-sheet paper capacity (based on 80 g/m2); Stapling capacity: max. 65-sheet multi-position staple (based on 80 g/m2); Manual Stapling: 1-point at rear (Flat), 45 sheets (64 g/m2), 40 sheets (80 g/m2); Stapleless capacity: max. 10-sheet (64 g/m2), 8 sheet (65 - 81.4 g/m2), 6 sheet (81.5 - 105 g/m2); Requires BP-RB10 Paper Pass Unit

BP-FN18 Inner Finisher
A3 - B5 (offset/staple), SRA3 - A5R (non offset); Offset tray (upper): max. 500-sheet paper capacity*; Stapling capacity: max. 50-sheet multi-position staple*; Manual Stapling: 1-point at rear (Flat), 45 sheets (64 g/m2), 40 sheets (80 g/m2); Stapleless capacity: max.10-sheet (64 g/m2), 8 sheet (65 - 81.4 g/m2), 6 sheet (81.5 - 105 g/m2)

Specifications

General

Engine speed: A4 Colour (ppm)	45
Engine speed: A4 B/W (ppm)	45
Engine speed: A3 Colour (ppm)	23
Engine speed: A3 B/W (ppm)	23
Paper size: Min.	A6R
Paper size: Max.	SRA3
Paper weight: Min. (g/m²)	52
Paper weight: Max. (g/m²)	300
Paper capacity: Std. (sheets)	650
Paper capacity: Max. (sheets)	6300
Warm-up time (sec.)	14
Memory general: Max. (GB)	5
Storage: Std.	SSD
Storage: Opt.	SSD
SSD capacity: Std. (GB)	128
SSD capacity: Opt. (GB)	512
Duplex	Std.
Power requirements: Frequency Min. (Hz)	50
Power requirements: Frequency Max. (Hz)	60
Power consumption (kW)	1.84
Width (mm)	608
Depth (mm)	653
Height (mm)	829
Weight (kg)	78
Power Requirements: voltage Min. (V)	220
Power Requirements: voltage Max. (V)	240

Scan

Network scanner	Std.
Push scan resolution (dpi)	100, 150, 200, 300, 400, 600
Pull scan resolution (dpi)	75, 100, 150, 200, 300, 400, 600, 50-9600
File formats: Std.	TIFF, PDF, JPEG, PDF/A-1b, Encrypted PDF, XPS
File formats: Opt.	Rich Text (RFT), Searchable PDF, PDF/A-1a, Compact PDF, Text (TXT), Office Open XML (pptx, xlsx, docx)[1]
Scan destinations	Desktop, FTP, Email, Network folder, USB

File

Document filing	Std.
Stored jobs	Copy, Print, Scan, Fax transmission
Storage folders	Quick file, Main, Custom

Finish

Output capacity: Min. (sheets)	500
Output capacity: Max. (sheets)	3250
Staple capacity: Max. (sheets)	65
Saddle stitch	Opt.
Off-set shifting	Std.
Hole punch	Opt.

Toner Yield

Black (pages at 5% coverage)	40000
Cyan (pages at 5% coverage)	24000
Magenta (pages at 5% coverage)	24000
Yellow (pages at 5% coverage)	24000

Print

Network printer	Std.
Resolution (dpi)	1200 x 1200, 600 x 600, 9600 x 600
Interface: Std.	USB 2.0, USB 3.0, 10Base-T, 100Base-TX, 1000Base-T
Supported OS: Std.	Windows 10, Windows 11, Windows Server 2016, Windows Server 2019, Windows Server 2022, Windows Server 2025, Mac OS X 10.15, Mac OS X 11, Mac OS X 12, Mac OS X 13, Mac OS X 14, macOS 15
Network protocols	TCP/IP (IPv4, IPv6)
Printing protocols	LPR, Raw TCP (port 9100), POP3 (e-mail printing), HTTP, FPT for downloading print files, IPP, SMB, WSD
Available Fonts	80 PCL, 139 PostScript 3

Copy

Original paper size: Max.	A3
First copy out time: Colour (sec.)	6.5
First copy out time: B/W (sec.)	4.6
E-sort	Opt.
Continuous copy (Max. copies)	9999
Scan resolution: B/W (dpi)	600 x 600, 600 x 400
Scan resolution: Colour (dpi)	600 x 600
Print resolution (dpi)	1200 x 1200, 600 x 600, 9600 x 600
Gradation: Colour (equivalent levels)	256
Zoom range: Min. (%)	25
Zoom range: Max. (%)	400
Preset copy ratios	10
Scan method	Push scan, Pull scan

Fax

Fax	Opt.
Compression method	MH, MR, MMR, JBIG
Communication protocol	Super G3, G3
Transmission time (sec.)	2
Modem speed: Min. (bps)	2400
Modem speed: Max. (bps)	33600
Transmission resolution: Std (dpi)	203.2 x 97.8 dpi
Transmission resolution: Ultra Fine (dpi)	406.4 x 391 dpi
Document size: Min.	A5
Document size: Max.	A3
Memory: Max. (GB)	4
Grey scale (levels)	256
Dial registration: rapid/speed dial	2000
Broadcast transmission (Max. destinations)	500

Wireless Lan

Wireless LAN	Opt.
Compliant regulation	IEEE802.11a/ac/b/g/n
Access mode	Infrastructure mode, Software AP mode
Security	WEP, WPA/WPA2-mixed PSK, WPA/WPA2-mixed EAP, WPA2 PSK, WPA2 EAP, WPA2 EAP/WPA3-mixed, PSK/SAE, WPA3 SAE, WPA2/WPA3-mixed, EAP, WPA3 EAP

[1] PDF/A-1a, Searchable PDF, OOXML (pptx, xlsx, docx), TXT (UTF-8), RTF require MX-EB20. Compact PDF requires MX-EB19.

Design and specifications are subject to change without prior notice. All information was correct at time of print. Microsoft, Excel, PowerPoint, OneDrive, SharePoint, Active Directory, Windows Server, and Windows are either registered trademarks or trademarks of Microsoft Corporation in the US and/or other countries. Adobe and PostScript 3 are either registered trademarks or trademarks of Adobe Systems Incorporated in the US and/or other countries. Google Drive, Gmail, Android, and Google Cloud Print are trademarks of Google LLC. The Google Drive trademark is used with permission from Google LLC. Box is a trademark, service mark, or registered trademark of Box, Inc. QR Code is a registered trademark of DENSO WAVE INCORPORATED in Japan and other countries. AirPrint and Mac are trademarks of Apple Inc., registered in the US and other countries. PCL is a registered trademark of Hewlett_x0002_Packard Company. Qualcomm DirectOffice is a product of Qualcomm Technologies, Inc. and/or its subsidiaries. Qualcomm is a trademark of Qualcomm Incorporated, registered in the US and other countries. DirectOffice is a trademark of CSR Imaging US, LP, registered in the US and other countries. All other company names, product names and logotypes are trademarks or registered trademarks of their respective owners. ©Sharp Corporation All trademarks acknowledged. E&O. Ref: Sharp BP-51C45, 8/10/2026